OSA (Officine Sallustio Arturo) Demolition Equipment is rooted from **1993** and was born through the intuition and passion of Mr.Arturo Sallustio and sons, who boast a family **tradition** of 3 generations in the precision mechanics sector and in the export of Made in Italy products throughout the world.
A core philosophy and a careful design is what drove Osa Demolition Equipment to establish itself all over the world. A broad commercial reach, with accurate **pre and post sale services**, has as objective the utmost satisfaction of the final user.

10

Series of products

100

Different models

+60

Countries served

4

Factories

2500

Units per year

FACTORIES

1. **Production & Offices**
2. **Warehouse**

- Precision mechanics
- Testing
- Assembly
- Painting

OSA only uses the best materials available on the market; all the materials are 100% made in Italy, and they are processed and assembled completely in our factories in order to guarantee the quality of our products. Moreover, at the end of the assembly phase, the attachments are subjected to test that certifies their proper functioning.

3. Carpentry
4. Welding

- CNC cutting and boaring
- Robotic welding

14'000 production facilities

70 employees

50 CNC machines

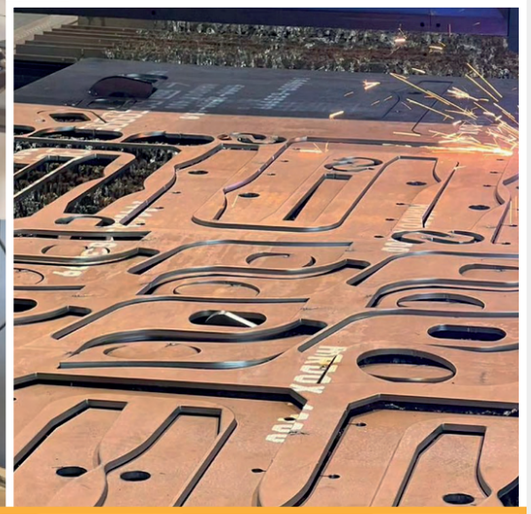

INDEX

7 HB

11 MB

13 RS

15 MC

19 RV

INDEX

21 FPV

23 FM

25 SH

27 GR

29 LIV

HB SERIE

GAS THRUST TECHNOLOGY
OSA breakers use the pressurized nitrogen in the head, along with the hydraulic pressure of the excavator, to increase the impact energy of the tool.

INTERNAL DISTRIBUTOR
The HB series has been designed with the system of inner control valves which, compared to the old external valve system, allows for greater impact forces, makes the speed constant even at high temperatures and protects the valve from shocks.

FREQUENCY VALVE
In the medium-large series it is possible to change the frequency and the energy of impact, according to the material to be processed. When there is a very hard material, it's recommended to increase the energy/power, reducing therefore the frequency. On the contrary, softer materials require increased frequency with decreased energy/power. This is a manual adjustment that be completed using an allen key.

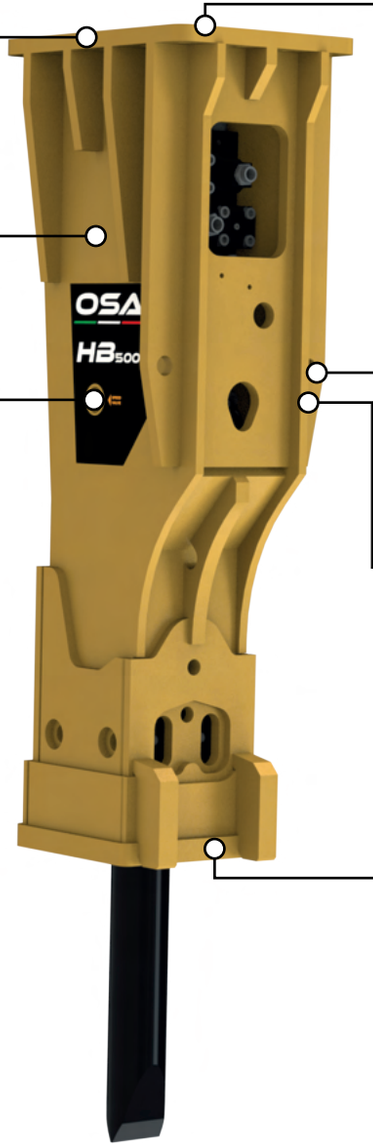

UPPER/LOWER SHOCK ABSORBER
OSA breakers feature two Vulcolan shock absorbers with high vibration absorption capacity, in order to preserve the body of the hammer and drastically reduce the production of noise to the limits permitted by law.

BACK PRESSURE
The HB series can perform well with up to 290 PSI of back pressure.

DUST PREVENTION SYSTEM
The medium-heavy HB series has a valve that prevents dust from entering, preserving the breaker from debris. This valve, when connected to a compressor, allows for underwater demolition operation.

CASE PROTECTION
The case is made in HARDOX, a wear resistent material that protects the body from shocks during the demolition phase.

		HB 70	HB 90	HB 100	HB 150	HB 180	HB 250	HB 300	HB 350	HB 450	HB 580
TOOL DIAMETER	mm in	40 1.57	40 1.57	42.5 1.65	45 1.77	56 2.20	63 2.48	67 2.64	77 3.03	85 3.35	92 3.62
HEIGHT WITH TOOL (B)	mm in	950 37	950 37	1035 41	1035 41	1210 48	1280 50	1300 51	1480 58	1600 63	1800 71
OPERATING TOTAL WEIGHT	kg lbs	80 176.4	100 220.5	115 253.5	155 341.7	200 440.9	260 573.2	300 661.4	405 829.9	480 1058.2	670 1477.1
OIL PRESSURE	bar psi	60/130 870/1885	60/130 870/1885	90/120 1305/1740	90/120 1305/1740	90/120 1305/1740	100/130 1450/1885	100/130 1450/1885	110/140 1595/2031	90/140 1305/2031	130/150 1850/2176
OIL CAPACITY	l/min gal/min	18/25 5/7	18/25 5/7	20/35 5/9	20/35 5/9	25/50 7/13	30/60 9/16	30/70 8/18	60/90 16/24	60/100 16/26	70/100 18/26
STRIKE FREQUENCY	c/min s/min	930/1300 930/1300	700/1400 700/1400	930/1300 930/1300	700/1400 700/1400	600/1200 600/1200	500/1000 500/1000	450/900 450/900	400/850 400/850	400/800 400/800	400/850 400/850
STRIKE ENERGY	joule ft lbs	150 111	155 114	160 118	190 140	330 243	450 332	550 406	750 553	850 627	1300 959
EQUIPMENT WEIGHT	kg lbs	70 154.3	90 198.4	100 220.5	140 308.6	180 396.8	240 529.1	280 617.3	380 837.8	450 992.1	580 1278.7
BACK PRESSURE	bar psi	20/25 290/362	20/25 290/362	20/25 290/362	20/25 290/362	20/25 290/362	20/25 290/362	20/25 290/362	20/25 290/362	20/25 290/362	20/25 290/362
EXCAVATOR WEIGHT	ton lbs	0.8/2.1 1700/4600	1/2.3 2200/5000	1.1/2.8 2400/6100	1.3/3.3 2800/7200	2/4.4 4400/9700	3/6 6600/13200	4/7.5 8800/16500	5/9 11000/19900	6/12 13200/26400	7/14 15400/30800

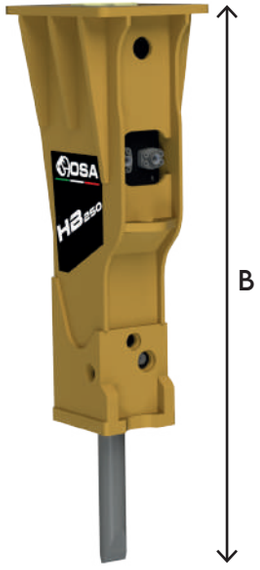

		HB 910	HB 1250	HB 1500	HB 1700	HB 1900	HB 2500
TOOL DIAMETER	mm in	102 4.02	125 4.92	134 5.27	139 5.47	140 5.51	150 5.91
HEIGHT WITH TOOL (B)	mm in	2050 81	2280 90	2400 94	2420 95	2430 96	2650 104
OPERATING TOTAL WEIGHT	kg lbs	1020 2248.7	1340 2954.2	1630 3593.5	1860 4100.6	2000 4409.2	2750 6062.7
OIL PRESSURE	bar psi	150/170 2176/2466	150/170 2176/2466	130/160 1885/2321	130/160 1885/2321	130/150 1885/2176	140/160 2031/2321
OIL CAPACITY	l/min gal/min	80/110 21/29	90/120 24/32	150/210 40/55	150/230 40/61	180/230 48/61	250/270 66/71
STRIKE FREQUENCY	c/min s/min	300/700 300/700	300/700 300/700	350/550 350/550	350/600 350/600	350/600 350/600	350/600 350/600
STRIKE ENERGY	joule ft lbs	2000 1475	3000 2213	4000 2950	4200 3098	4500 3319	6000 4425
EQUIPMENT WEIGHT	kg lbs	900 1984.2	1200 2645.5	1480 3262.8	1710 3769.9	1850 4078.6	2500 5511.6
BACK PRESSURE	bar psi	20/25 290/362	20/25 290/362	20/25 290/362	20/25 290/362	20/25 290/362	20/25 290/362
EXCAVATOR WEIGHT	ton lbs	12/18 26500/39600	15/23 33000/50700	18/27 39600/59500	20/29 44000/63900	22/30 48500/66100	25/38 55100/83700

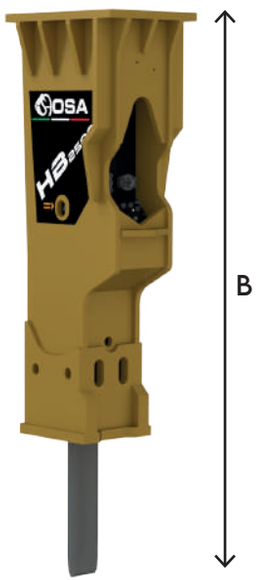

		HB 3000	HB 4000	HB 5000	HB 6000	HB 8000	HB 10000
TOOL DIAMETER	mm in	160 6.30	175 6.89	185 7.09	200 7.95	220 8.07	240 9.45
HEIGHT WITH TOOL (B)	mm in	2980 117	3180 125	3250 128	4000 157	4500 177	5000 197
OPERATING TOTAL WEIGHT	kg lbs	3300 7257.3	4300 9479.9	5100 11243.6	6000 13227.7	8000 17637	10500 23148.5
OIL PRESSURE	bar psi	140/160 2031/2321	140/190 2031/2757	160/190 2321/2756	170/210 2466/3046	170/210 2466/3046	170/210 2466/3046
OIL CAPACITY	l/min gal/min	260/320 69/85	280/340 74/90	260/360 69/95	310/390 82/103	350/420 92/111	450/530 119/140
STRIKE FREQUENCY	c/min s/min	250/500 250/500	250/500 250/500	250/500 250/500	250/360 250/360	280/350 280/350	250/320 250/320
STRIKE ENERGY	joule ft lbs	9500 7007	12000 8851	13700 10105	14500 10695	17000 12539	19000 14014
EQUIPMENT WEIGHT	kg lbs	3000 6613.9	3800 8378	4700 10361.7	5500 12125.4	7500 16534.7	10000 22046.2
BACK PRESSURE	bar psi	20/25 290/362	20/25 290/362	20/25 290/362	20/25 290/362	20/25 290/362	20/25 290/362
EXCAVATOR WEIGHT	ton lbs	32/48 70500/105800	38/60 77000/132000	45/70 99000/155000	60/100 133000/220000	65/110 143000/242500	90/140 198400/308600

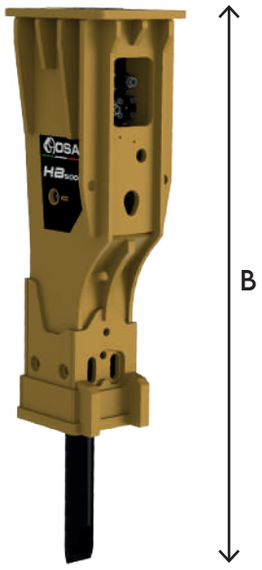

MB SERIE

BODY WITHOUT TIE-ROD
It reduces maintenance costs.

BUSHINGS
Easily replaceable on construction site, without having to disassemble the breaker.

MAX POWER/WEIGHT RATIO
The power of MB breakers is greater, at equal weight, than the HB models.

INNOVATIVE DESIGN
Improved design for optimal work in trenches and holes digging.

INCREASED PISTON
It offers higher productivity than HB models in the same class.

PISTON AND DISTRIBUTOR
They are the only moving parts in the breaker and the distributor is incorporated into the cylinder.

PROTECTION SYSTEM
System that protects against blank strikes

BACK PRESSURE
The MB series can perform well with up to 362 PSI of back pressure.

		MB 10	MB 15	MB 20	MB 25	MB 35	MB 45
TOOL DIAMETER	mm in	40 1.57	45 1.77	56 2.2	63 2.48	77 3.03	85 3.35
HEIGHT WITH TOOL (B)	mm in	1000 39	1030 40.5	1080 42.5	1220 48	1300 51.2	1520 59.8
OPERATING TOTAL WEIGHT	kg lbs	120 264	150 330	190 418	245 540	340 750	440 868
OIL PRESSURE	bar psi	90/120 1305/1740	90/120 1305/1740	90/120 1305/1740	100/130 1450/1885	110/140 1595/2030	120/150 1740/2176
OIL CAPACITY	l/min gal/min	15/30 4/8	20/40 5/10	25/50 6/13	30/60 8/16	40/70 10/18	50/90 13/24
STRIKE FREQUENCY	c/min s/min	800/1400 800/1400	700/1100 700/1100	600/1000 600/1000	500/900 500/900	500/800 500/800	400/750 400/750
STRIKE ENERGY	joule ft lbs	190 140	250 184	330 243	450 331	750 553	850 627
EQUIPMENT WEIGHT	kg lbs	90 198	109 240	140 309	197 434	278 613	394 868
BACK PRESSURE	bar psi	25 363	25 363	25 363	25 363	25 363	25 363
EXCAVATOR WEIGHT	ton lbs	1.2/2.2 2600/4800	1.5/3.5 3300/7700	2.5/5 5500/11000	3/7 6600/15000	4/10 8800/22000	6/10 13000/22000

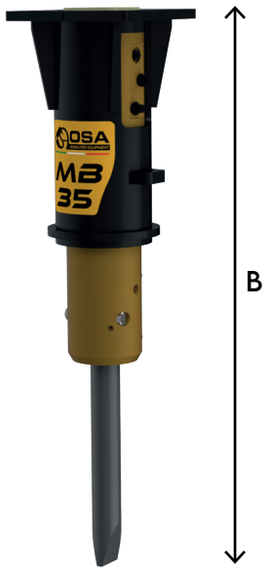

RS SERIE

HYDRAULIC ROTATION
OSA crushers are equipped with a 360° hydraulic rotation system to allows a correct aligment during use. All medium-large models use a double motor design to increase the rotation torque.

HYDRAULIC CYLINDERS
The two inverted hydraulic cylinders provide optimal crushing power, while being protected from accidental impact during use.

HOUSING
Entirely made with HARDOX and WELDOX, the RS series is the most efficient for performing primary demolitions of reinforced concrete structures.

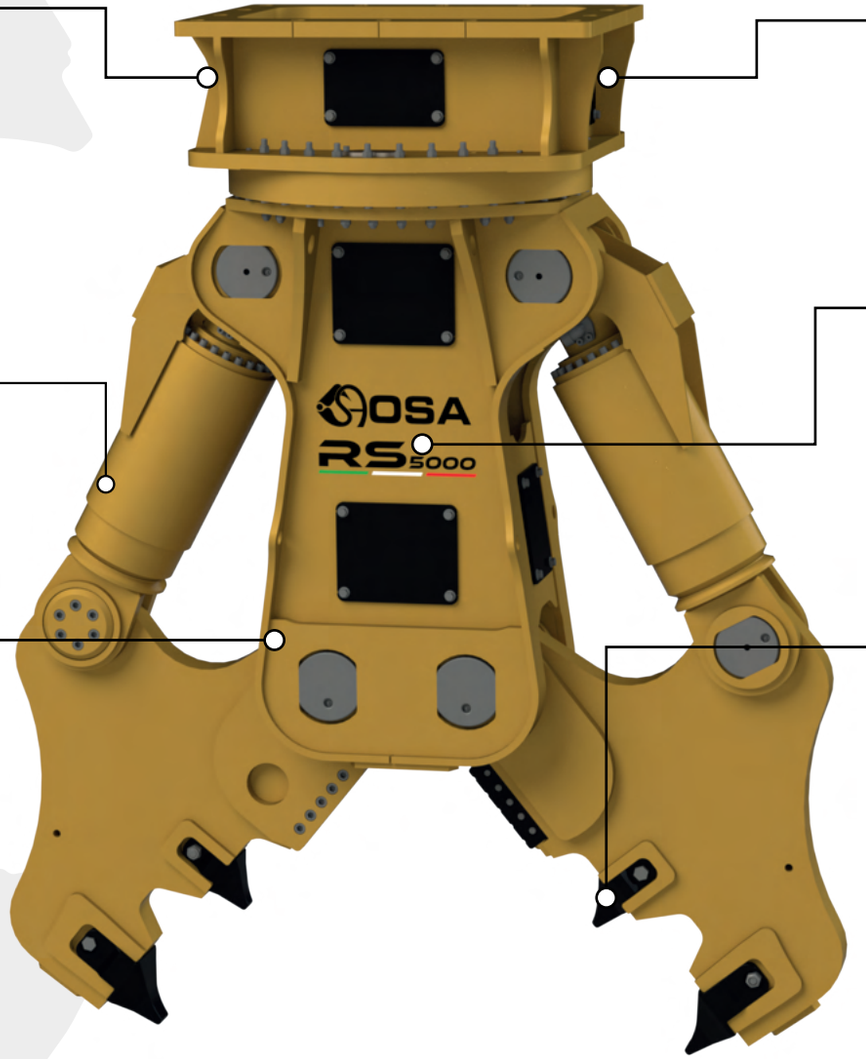

PRV SYSTEM
Innovative Pressure Relief Valve system that protects the crusher from hydraulic pressure peaks.

SPEED VALVE
Present in medium-large size crushers, the Speed Valve significantly increases the opening and closing speed of the cylinders.

TEETH AND BLADES
The teeth have a patented cutting profile that inreases penetration and crushing of the material, unlike conventional teeth. The blades, on the other hand, are reversible in order to increase their useful life.

		RS 200	RS 1000	RS 1500	RS 1800	RS 2000	RS 2500	RS 4000	RS 5000	RS 6000	RS 8000	RS 12000
OPENING (A)	mm	250	600	710	825	920	1100	1350	1500	1650	1830	2300
	in	10	24	28	32	36	43	53	59	65	72	90.5
HEIGHT (B)	mm	840	1700	1830	2180	2300	2700	2800	2850	3000	3200	3820
	in	33	67	72	85	90	106	110	112	118	126	150
WIDTH (C)	mm	300	460	480	665	740	880	1034	1055	1080	1185	1410
	in	12	18	19	26	29	35	41	42	43	47	56
WEIGHT	kg	210	1036	1400	2070	2200	2750	3800	4800	5800	7900	11950
	lbs	463	2284	3085	4563	4850	6063	8378	10582	12787	17416	26345
OIL PRESSURE	bar	220	310	340	340	340	340	340	340	340	340	340
	psi	3190	4496	4931	4931	4931	4931	4931	4931	4931	4931	4931
OIL CAPACITY	l/min	20/30	110/150	150/180	200/230	220/300	250/350	300/380	350/400	380/450	400/500	450/700
	gal/min	5/8	29/39	39/47	52/61	58/79	66/92	79/100	92/106	100/119	106/132	119/185
ROTATION PRESSURE	bar	50	120	120	120	120	120	120	120	120	120	120
	psi	725	1740	1740	1740	1740	1740	1740	1740	1740	1740	1740
ROTATION CAPACITY	l/min	15	15/20	15/20	15/20	15/20	40	40	40	40	50	60
	gal/min	4	4/5	4/5	4/5	4/5	10.5	10.5	10.5	10.5	13	16
EXCAVATOR WEIGHT	ton	1.5/3	12/16	16/22	22/30	30/40	35/50	40/50	50/65	60/80	80/100	90/150
	lbs	3300/ 6600	26400/ 35200	35200/ 48500	48500/ 66100	66100/ 88100	77100/ 110200	88100/ 110200	110200/ 143300	132200/ 176300	176400/ 220500	198400/ 330600
OPERATING TOTAL WEIGHT	kg	230	1150	1550	2300	2400	3000	4150	5324	6380	8690	13145
	lbs	507	2535	3417	5070	5291	6614	9150	11737	14065	19158	28979

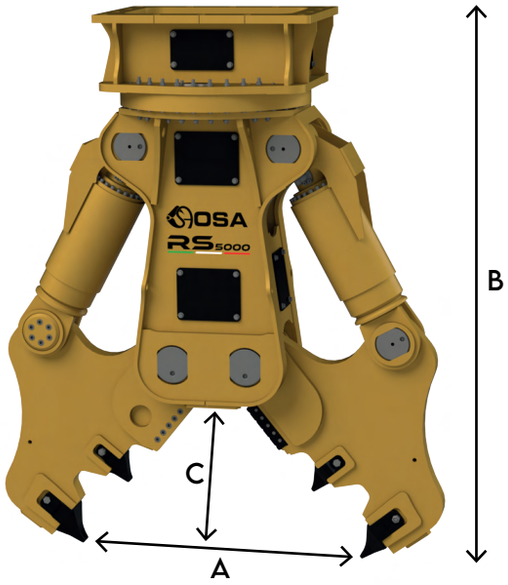

MC SERIE

HYDRAULIC ROTATION
OSA crushers are equipped with a 360° hydraulic rotation system to allows a correct aligment during use. All medium-large models use a double motor design to increase the rotation torque.

HYDRAULIC CYLINDERS
The two inverted hydraulic cylinders provide optimal crushing power, while being protected from accidental impact during use.

TEETH AND BLADES
The teeth have a patented cutting profile that inreases penetration and crushing of the material, unlike conventional teeth. The blades, on the other hand, are reversible in order to increase their useful life.

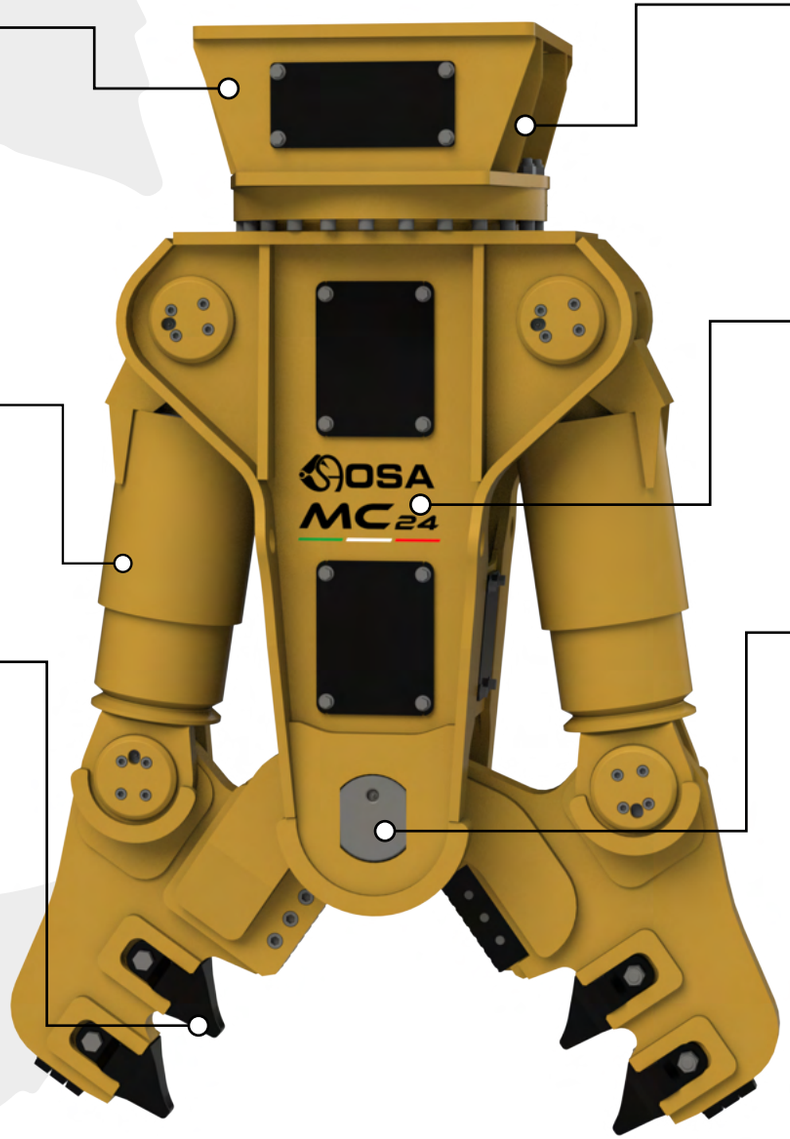

PRV SYSTEM
Innovative Pressure Relief Valve system that protects the crusher from hydraulic pressure peaks.

SPEED VALVE
Present in medium-large sizes Multisystem crushers, the Speed Valve significantly increases the opening and closing speed of the cylinders.

MULTI-KIT
The multisystem crushers have interchangeable kits, to be replaced according to the processing needs. This makes the MC series the ultimate expression of versatility, functionality and power.

		MC 5	MC 7	MC 10	MC 15	MC 18	MC 24	MC 30	MC 40	MC 55	MC 80	MC 110
EXCAVATOR WEIGHT	ton	4/8	7/11	12/15	14/19	21/28	26/36	30/38	36/50	50/70	80/100	85/130
	lbs	8800/ 17600	15500/ 24200	26500/ 33000	30900/ 41900	46300/ 61700	57300/ 79400	66100/ 83800	79400/ 110200	110200/ 154300	176400/ 220500	187400/ 286600
WEIGHT (WITHOUT KIT)	kg	283	450	650	990	1210	1640	2380	2510	3791	5220	7300
	lbs	624	992	1433	2182	2667	3615	5247	5534	8357	11508	16094
OIL PRESSURE	bar	250	310	310	340	340	340	340	340	340	340	340
	psi	3625	4496	4496	4931	4931	4931	4931	4931	4931	4931	4931
OIL CAPACITY	l/min	30/50	100/150	140/160	200/240	250/300	260/320	280/360	300/350	340/380	400/500	500/600
	gal/min	8/13	26/40	37/42	52/63	66/79	68/84	74/95	79/92	90/100	106/132	132/158
ROTATION PRESSURE	bar	50	50	120	120	120	120	120	120	120	120	120
	psi	725	725	1740	1740	1740	1740	1740	1740	1740	1740	1740
ROTATION CAPACITY	l/min	15	15	15/20	15/20	15/20	15/20	40	40	40	50	60
	gal/min	4	4	4/5	4/5	4/5	4/5	10.5	10.5	10.5	13	16
OPERATING TOTAL WEIGHT	kg	500	700	1000	1500	1900	2500	3000	3800	5420	7942	10780
	lbs	1102	1543	2204	3306	4188	5511	6613	8377	11950	17509	23765

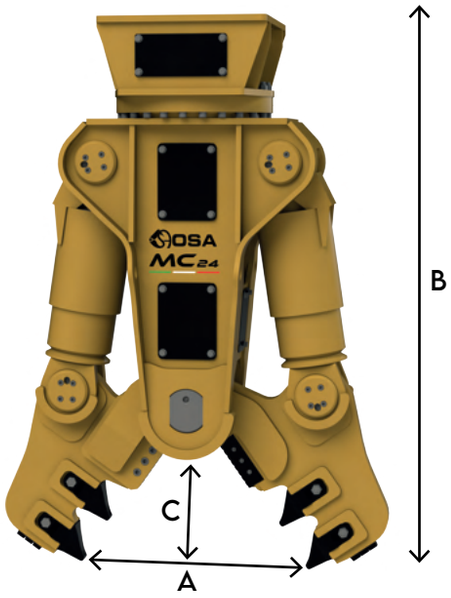

MC SERIE

CRUSHER KIT

		MC 5	MC 7	MC 10	MC 15	MC 18	MC 24	MC 30	MC 40	MC 55	MC 80	MC 110
OPENING (A)	mm	410	530	670	710	800	850	920	1200	1300	1700	1900
	in	16.2	20.8	26.4	28	31.5	33.5	36.2	47.2	51.2	66.9	74.8
HEIGHT (B)	mm	1230	1446	1680	1993	2050	2150	2380	2480	2850	3200	3685
	in	48.4	56.9	66.1	78.5	80.7	84.6	93.7	97.6	112.2	126	145.1
WIDTH (C)	mm	250	350	475	530	540	540	550	600	810	1110	1425
	in	9.9	13.8	18.7	20.9	21.3	21.3	21.7	23.6	31.9	43.7	56.1
WEIGHT	kg	115	200	270	474	522	600	741	873	1422	2580	3800
	lbs	253	440	595	1044	1150	1323	1633	2450	3134	5688	8378

SHEAR KIT

		MC 5	MC 7	MC 10	MC 15	MC 18	MC 24	MC 30	MC 40	MC 55	MC 80	MC 110
OPENING (A)	mm	340	270	370	370	460	540	560	620	700	750	800
	in	13.4	10.7	14.6	14.6	18.1	21.3	22	24.4	27.6	29.5	31.5
HEIGHT (B)	mm	1214	1466	1696	1885	1910	2150	2256	2430	2600	2610	2815
	in	47.8	57.7	66.8	74.2	75.2	84.6	88.8	95.7	102.8	102.8	110.8
WIDTH (C)	mm	280	370	370	380	400	400	410	430	485	520	555
	in	11	14.6	14.6	14.9	15.8	15.8	16.1	16.9	19.1	20.5	21.8
WEIGHT	kg	83.5	195	282	400	476	616	665	960	1310	2000	2500
	lbs	184	430	621	882	1050	1358	1466	2116	2888	4409	5511

COMBI-CUTTER KIT

		MC 10	MC 15	MC 18	MC 24	MC 30	MC 40	MC 55	MC 80	MC 110
OPENING (A)	mm	570	720	830	865	870	1100	1300	1600	1750
	in	22.4	28.3	32.7	34.1	34.3	43.3	51.2	63	68.9
HEIGHT (B)	mm	1745	2040	2115	2120	2404	2500	2750	3015	3270
	in	67.7	80.3	83.3	83.5	94.7	98.4	108.3	118.7	128.7
WIDTH (C)	mm	510	575	605	570	615	650	750	925	1010
	in	20	22.6	23.8	22.5	24.2	25.6	29.5	36.4	39.8
WEIGHT	kg	320	489	585	695	770	1100	1350	2550	3750
	lbs	705	1078	1289	1532	1700	2425	2976	5622	8267

PULVERIZER KIT

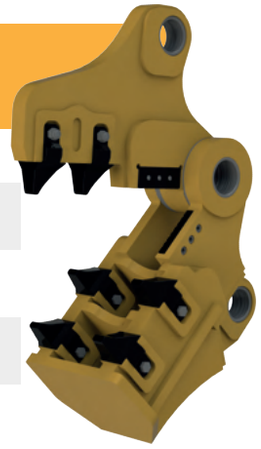

		MC 5	MC 7	MC 10	MC 15	MC 18	MC 24	MC 30	MC 40	MC 55	MC 80	MC 110
OPENING (A)	mm	310	500	570	650	800	830	920	1000	1100	1600	1800
	in	12.2	19.7	22.4	25.6	31.5	32.7	36.2	39.4	43.3	63	70.9
HEIGHT (B)	mm	1225	1486	1715	1980	2080	2160	2470	2537	2870	3355	3685
	in	48.2	58.5	67.5	78	81.9	85	97.2	99.9	113	132.1	145.1
WIDTH (C)	mm	250	390	510	560	570	600	620	576	870	1265	1425
	in	9.9	15.4	20	22	22.4	23.6	24.4	22.7	34.3	49.8	56.1
WEIGHT	kg	100	230	320	500	615	688	938	1151	1690	2800	3800
	lbs	220	507	705	1102	1356	1517	2068	2537	3726	6173	8378

UNIVERSAL KIT

		MC 10	MC 15	MC 18	MC 24	MC 30	MC 40	MC 55	MC 80	MC 110
OPENING (A)	mm	600	610	630	708	800	820	1000	1400	1565
	in	23.6	24	24.8	27.9	31.5	32.3	39.4	55.1	61.6
HEIGHT (B)	mm	1655	1835	1980	2230	2390	2650	2795	3205	3506
	in	65.2	72.2	78	87.8	94.1	104.3	110	126.2	138
WIDTH (C)	mm	450	455	470	470	500	650	795	1115	1246
	in	17.7	17.9	18.5	18.5	19.7	25.6	31.3	43.9	49.1
WEIGHT	kg	320	430	580	862	900	1180	1650	2600	3600
	lbs	705	948	1279	1900	1984	2601	3638	5732	7937

RV SERIE

PRV SYSTEM
Innovative Pressure Relief Valve system that protects the crusher from hydraulic pressure peaks.

HYDRAULIC CYLINDER
The RV series has an inverted hydraulic cylinder to protect the rod from accidental impact during demolition.

HYDRAULIC ROTATION
OSA crushers are equipped with a 360° hydraulic rotation system to allows a correct aligment during use. All medium-large models use a double motor design to increase the rotation torque.

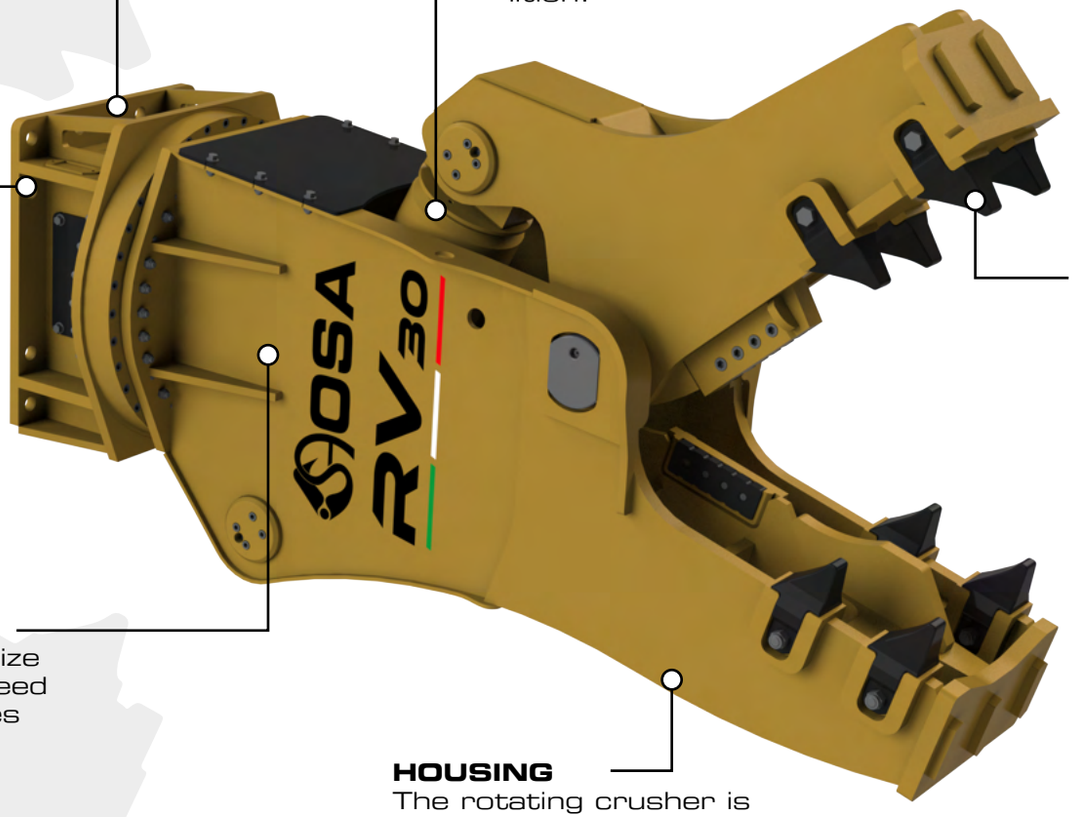

TEETH AND BLADES
The teeth have a patented cutting profile that inreases penetration and crushing of the material, unlike conventional teeth. The blades, on the other hand, are reversible in order to increase their useful life.

SPEED VALVE
Present in medium-large size rotating crushers, the Speed Valve significantly increases the opening and closing speed of the cylinder .

HOUSING
The rotating crusher is made entirely of HARDOX 400, which makes it suitable for primary and secondary demolition.

		RV 6	RV 10	RV 16	RV 20	RV 25	RV 30	RV 40	RV 60	RV 80	RV 110
OPENING (A)	mm	520	630	790	840	880	1010	1130	1280	1350	1720
	in	20	25	31	33	34.6	39.7	45	50	53	68
HEIGHT (B)	mm	1600	1815	2120	2300	2400	2660	2850	3230	3400	3800
	in	63	71.5	83.5	90.6	94.5	105	112	127	134	150
WIDTH (C)	mm	340	390	500	500	530	530	550	660	620	650
	in	13.4	15.5	19.7	19.7	20.8	20.8	22	26	24.4	25.6
WEIGHT	kg	660	1105	1710	2000	2500	2970	3940	5850	7800	9950
	lbs	1455	2436	3769	4400	5511	6547	8686	12897	17196	21935
OIL PRESSURE	bar	250	310	340	340	340	340	340	340	340	340
	psi	3625	4496	4931	4931	4931	4931	4931	4931	4931	4931
OIL CAPACITY	l/min	80/100	100/150	150/220	210/260	250/300	280/320	300/350	330/400	400/500	500/600
	gal/min	21/26	26/39	39/58	55/68	66/79	74/84	79/92	87/105	105/132	132/158
ROTATION PRESSURE	bar	50	120	120	120	120	120	120	120	120	120
	psi	725	1740	1740	1740	1740	1740	1740	1740	1740	1740
ROTATION CAPACITY	l/min	15	15/20	15/20	15/20	40	40	40	40	40	40
	gal/min	4	4/5	4/5	4/5	10.5	10.5	10.5	10.5	10.5	10.5
OPERATING TOTAL WEIGHT	kg	710	1200	1850	2200	2700	3270	4300	6300	8550	10945
	lbs	1565	2645	4078	4850	5952	7209	9480	13900	18850	24100
EXCAVATOR WEIGHT	ton	7/12	9/15	15/20	20/26	25/32	30/40	38/55	55/70	70/90	90/120
	lbs	15400/ 26500	19900/ 33000	33000/ 44000	44000/ 57300	55000/ 70500	66000/ 88000	84800/ 121300	121300/ 154300	154300/ 198400	198400/ 264500

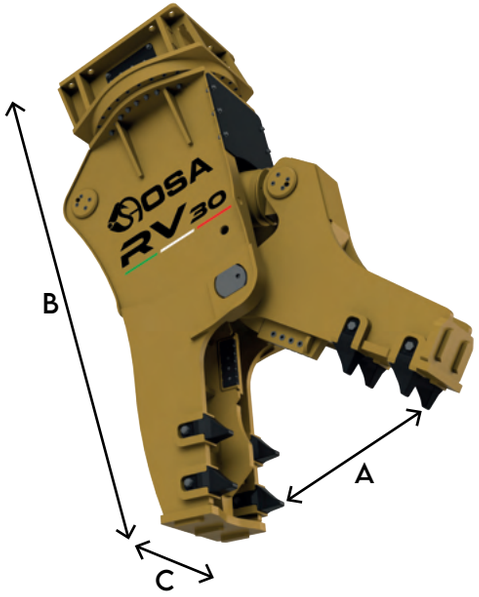

FPV SERIE

SPEED VALVE
Present in medium-large size fixed pulverizers, the Speed Valve significantly increases the opening and closing speed of the cylinder.

PRV SYSTEM
Innovative Pressure Relief Valve system that protects the crushers from hydraulic pressure peaks.

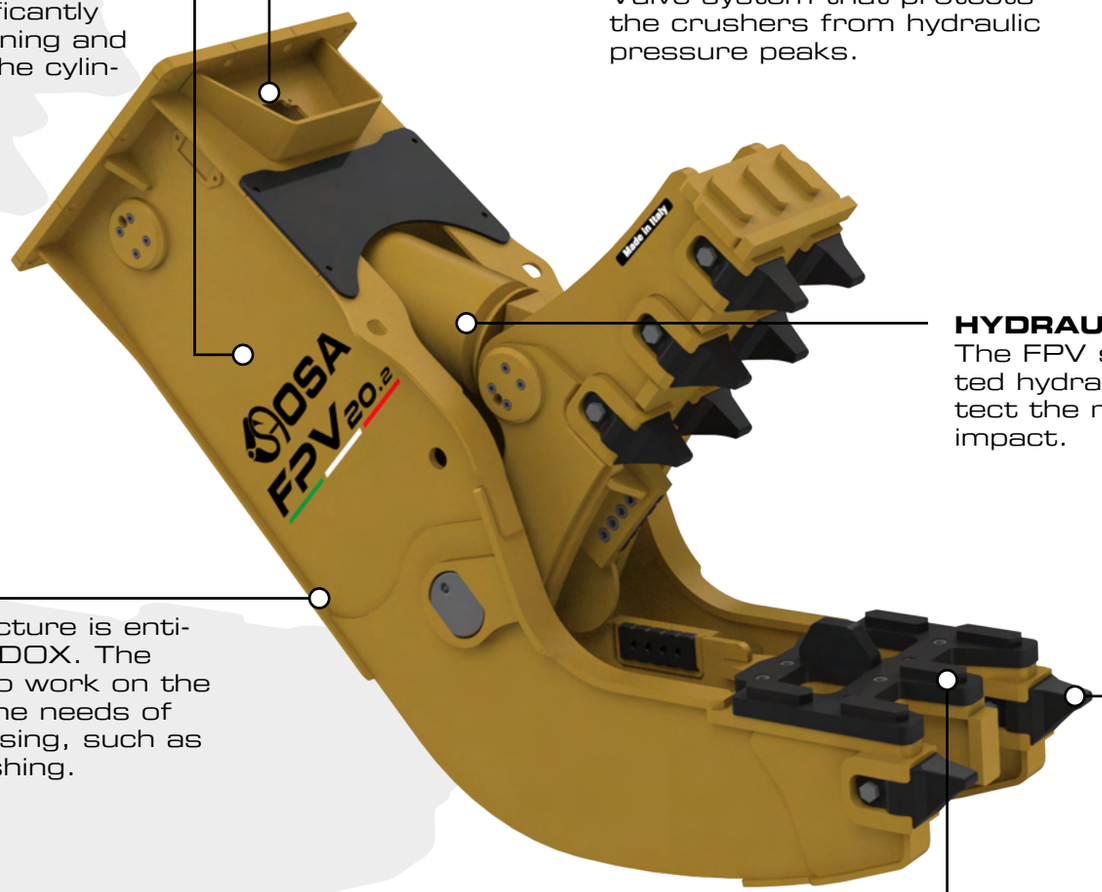

HYDRAULIC CYLINDER
The FPV series has an inverted hydraulic cylinder to protect the rod from accidental impact.

HOUSING
The machine structure is entirely made of HARDOX. The FPV is designed to work on the ground to meet the needs of secondary processing, such as recycling and crushing.

TEETH AND BLADES
The teeth have a patented cutting profile that inreases penetration and crushing of the material, unlike conventional teeth. The blades, on the other hand, are reversible in order to increase their useful life.

INTERCHANGEABLE PLATE
Some models of the FPV series have a plate that has demolition functions, just like the teeth. This plate prevents wear of the structural material, increasing the lifespan of the attachment.

		FPV 6	FPV 12	FPV 17	FPV 20.2	FPV 30.2	FPV 45	FPV 60	FPV 100
OPENING (A)	mm in	510 20	700 27	815 32	850 34	1040 41	1080 42.5	1130 44.5	1800 71
HEIGHT (B)	mm in	1300 51	1920 76	2080 82	2300 90.5	2660 105	2700 106	2960 116	3200 126
WIDTH (C)	mm in	330 13	400 15.8	460 18.1	550 21.7	560 22	600 23.6	760 29.9	950 37.4
WEIGHT	kg lbs	500 1102	1100 2425	1550 3417	2050 4520	2800 6173	4500 9920	5720 12610	10400 22928
OIL PRESSURE	bar psi	250 3625	310 4495	340 4931	340 4931	340 4931	340 4931	340 4931	340 4931
OIL CAPACITY	l/min gal/min	80/100 21/26	180/220 47/58	200/240 52/63	220/280 58/73	280/330 73/87	300/350 79/92	400/500 106/132	500/600 132/158
EXCAVATOR WEIGHT	ton lbs	6/7 13300/ 15400	12/17 26500/ 37500	16/20 35200/ 44100	21/29 46300/ 64000	30/45 66200/ 99200	40/60 88200/ 132300	60/80 132200/ 176300	80/130 176300/ 286600
OPERATING TOTAL WEIGHT	kg lbs	580 1278	1220 2690	1700 3748	2200 4850	3100 6834	4700 10360	6300 13889	11440 25220

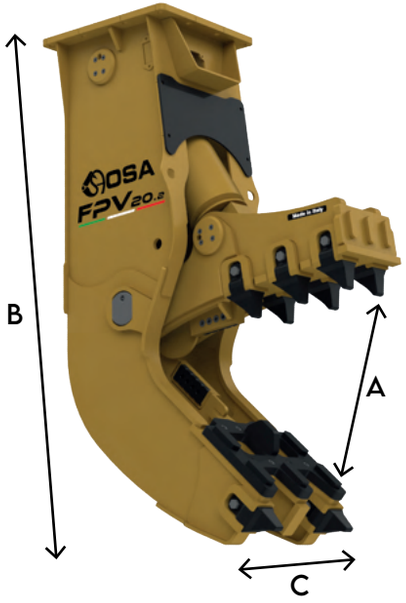

FM SERIE

EXCAVATOR MOUNTED
The mechanical crushers of the FM series are mounted directly on the excavator arm. Therefore, by using the force of the excavator piston, FM series does not require an hydraulic system.

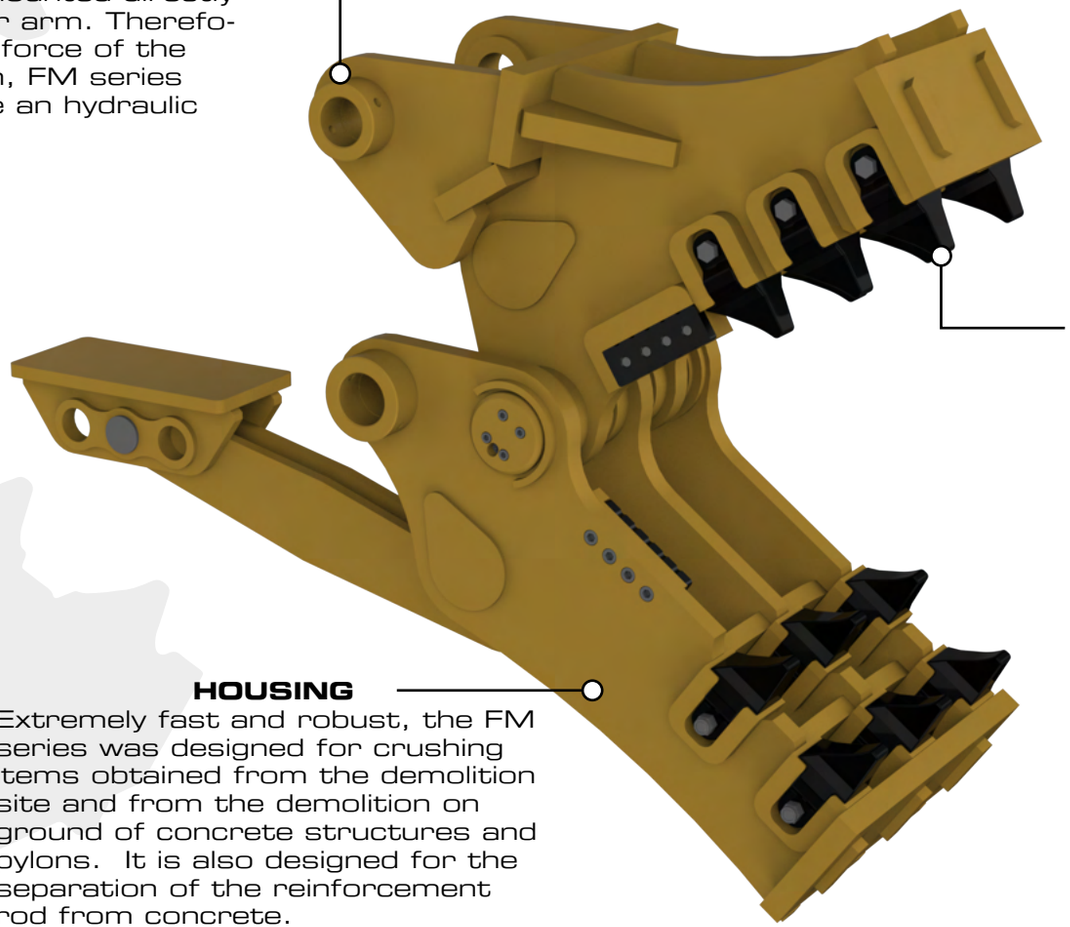

TEETH AND BLADES
The teeth have a patented cutting profile that inreases penetration and crushing of the material, unlike conventional teeth. The blades, on the other hand, are reversible in order to increase their useful life.H

HOUSING
Extremely fast and robust, the FM series was designed for crushing items obtained from the demolition site and from the demolition on ground of concrete structures and pylons. It is also designed for the separation of the reinforcement rod from concrete.

		FM 20	FM 25	FM 30	FM 40	FM 55	FM 65	FM 95
OPENING (A)	mm	900	1100	1150	1250	1350	1450	1550
	in	35	43	45	49	53	57	61
WIDTH (B)	mm	600	690	710	750	810	870	930
	in	24	27	28	29.5	32	34	37
BLADE	mm	200	200	240	240	240	280	280
	in	7.9	7.9	9.45	9.45	9.45	11	11
WEIGHT	kg	1000	1400	2000	2500	2800	4000	4900
	lbs	2205	3086	4409	5512	6173	8818	10803
EXCAVATOR WEIGHT	ton	18/22	22/32	32/42	42/60	50/65	60/80	90/100
	lbs	40000/ 48000	48000/ 70000	70000/ 90000	90000/ 130000	110000/ 140000	130000/ 175000	200000/ 220000

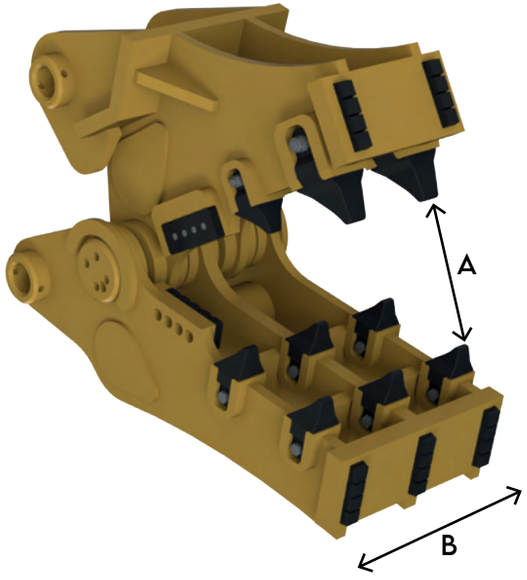

SH SERIE

HYDRAULIC ROTATION
OSA shears are equipped with a 360° hydraulic rotation system to allows a correct aligment during use. All medium-large models use a double motor.

HYDRAULIC CYLINDER
The SH series has an inverted hydraulic cylinder to protect the rod from accidental impact during demolition.

JAW GUIDES
Ensures a proper alignment of the jaws, even under high force conditions.

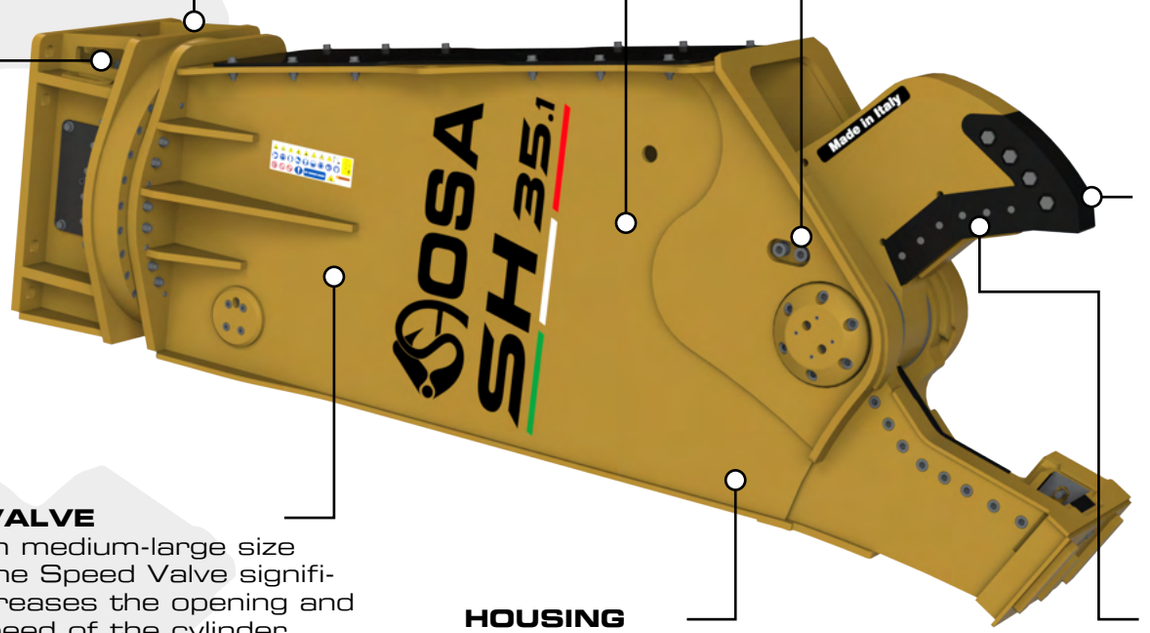

PRV SYSTEM
Innovative Pressure Relief Valve system that protects the Shears from hydraulic pressure peaks.

TIP
The shears use a Bolt-On tip thet protects the upper jaw during the cutting phase. The two-piece design offers great reliability, with maximum efficiency and cutting power.

SPEED VALVE
Present in medium-large size shears, the Speed Valve significantly increases the opening and closing speed of the cylinder .

HOUSING
Manufactured entirely of HARDOX, the robust housing of the SH shears make it suitable for steel demolition. The narrow body design protects the cylinder from the material resulting from the demolition while minimizing any obstruction on the operator's view.

BLADES
The blades are reversible, interchangeable and easy to replace.

		SH 6	SH 12	SH 20.1	SH 25.1	SH 35.1	SH 45	SH 55.1	SH 70	SH 80	SH 100	SH 120
OPENING (A)	mm	365	440	530	580	690	700	800	850	870	900	950
	in	14	17	21	23	27	28	31.5	33	34	36	37
HEIGHT (B)	mm	1880	2450	2785	2840	3170	3361	3960	4700	4170	5000	5300
	in	74	96	110	112	125	132	156	185	164	197	209
WIDTH (C)	mm	240	400	495	510	570	690	835	800	850	900	950
	in	9	16	19	20	22	27	33	31	33	36	37
WEIGHT	kg	640	1250	2080	2530	3200	4365	5691	6900	7830	9950	11500
	lbs	1411	2756	4586	5578	7055	9623	12445	15212	17262	21936	25353
OIL PRESSURE	bar	250	310	340	340	340	340	340	340	340	340	340
	psi	3626	4496	4931	4931	4931	4931	4931	4931	4931	4931	4931
OIL CAPACITY	l/min	80/100	120/160	200/220	200/260	240/300	300/350	350/400	380/430	400/500	500/700	700/900
	gal/min	21/26	31/42	53/58	53/68	63/79	79/92	92/106	100/113	106/132	132/185	185/238
ROTATION PRESSURE	bar	50	120	120	120	120	120	120	120	120	120	120
	psi	725	1740	1740	1740	1740	1740	1740	1740	1740	1740	1740
ROTATION CAPACITY	l/min	15	15/20	15/20	15/20	40	40	40	40	40	60	60
	gal/min	4	4/5	4/5	4/5	10.5	10.5	10.5	10.5	10.5	15.8	15.8
EXCAVATOR WEIGHT AT BUCKET PLACE	ton	7/12	12/18	20/28	26/34	34/40	45/60	50/70	70/100	80/110	90/120	100/130
	lbs	15400/ 26400	26400/ 39700	44000/ 61700	57300/ 75000	75000/ 88100	99200/ 132300	110200/ 154300	154300/ 220400	176300/ 242500	198400/ 264500	220400/ 286600
EXCAVATOR WEIGHT AT BOOM PLACE	ton	4/7	7/10	14/18	16/22	22/30	28/35	30/45	45/60	50/70	70/90	90/110
	lbs	8800/ 15400	15400/ 22000	30800/ 39700	35300/ 48500	48500/ 66100	61700/ 77200	66200/ 99200	99200/ 132300	110200/ 154300	154300/ 198400	198400/ 242500

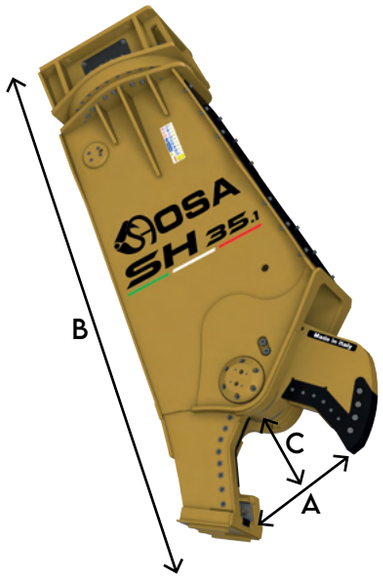

GR SERIE

HYDRAULIC ROTATION
The continous 360° rotation offers precise positioning of the attachment during use. All medium-large models use two hydraulic motors to increase the rotation torque and reduce component strain. In addition, there is a rotation valve which protects the motor from unwanted pressure spikes.

OVERCENTER AND PRESSURE RELIEF VALVE
The medium-large GR series feature an overcenter and a pressure relief valve. It protects the cylinder from pressure spikes coming from the excavator, and allows the load to be retained in the absence of operator input. This technology prevents unwanted fall of the load, making the work phases on site safer.

END OF STROKE STOP
Significantly reduces the stresses on the hydraulic cylinder and pins.

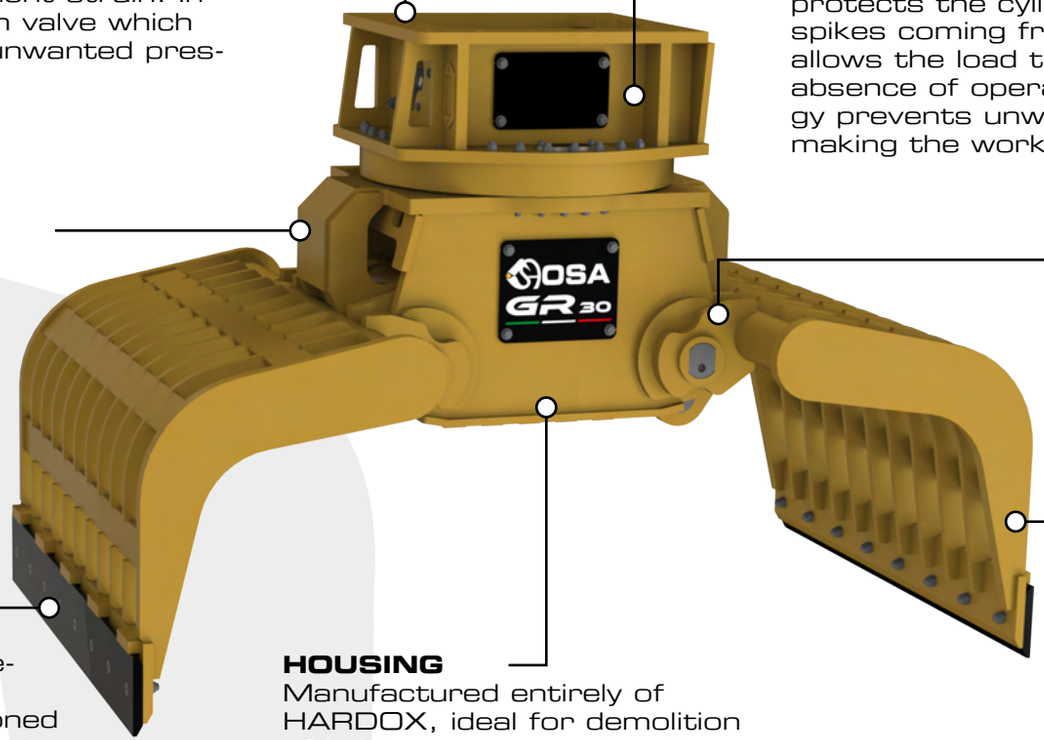

CONNECTING RODS
All GR series attachments use two connecting rods synchronized with the cylinder which favors homogeneous opening and closing of the jaws.

JAWS
The jaws have mechanical stops which prevent the cylinder from being subjected to end-of-stroke shocks.

BLADE AND BLADE HOLDER
The blades are interchangeable and easy to replace. Anti-shock bars are positioned on the blade holder in order to drastically reduce vibrations during the gripping phase.

HOUSING
Manufactured entirely of HARDOX, ideal for demolition of brick structures, handling and sorting of wood and other types of materials. The housing has HARDOX reinforcements positioned in high contact areas to protect it from impacts and reduce wear.

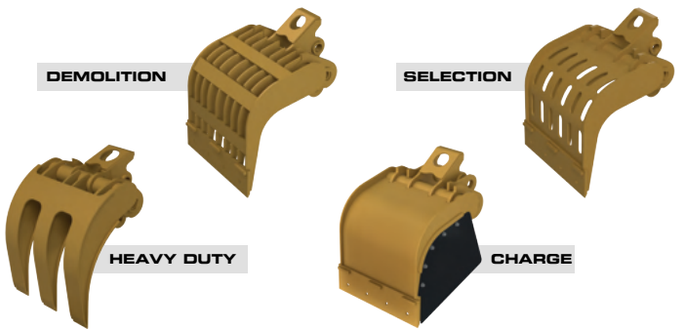

		GR 1	GR 3	GR 5	GR 7	GR 10	GR 15	GR 20	GR 25	GR 30	GR 40
OPENING (A)	mm	850	1050	1555	1750	2060	2145	2200	2430	2450	3000
	in	33.5	41	61.2	69	81.1	84.5	86.6	96.5	96.5	118
HEIGHT (B)	mm	740	940	1107	1375	1400	1475	1475	1581	1650	1860
	in	29	37	43.6	54	55	58	58	62	65	73
WIDTH (C)	mm	450	500	500	700	800	1000	1200	1400	1500	1500
	in	17.5	20	20	27.5	31.5	39.5	47	55	59	59
EXCAVATOR WEIGHT	kg	1.8/2.5	2.5/4	4/8	9/14	14/18	18/22	22/30	30/50	35/60	45/65
	lbs	4000/5500	5500/8800	8800/17600	19800/30800	30800/39600	39600/48500	48500/66100	66100/110200	77100/132300	99200/143300
WEIGHT	kg	187	270	420	737	1060	1430	1787	2250	2680	3740
	lbs	412	595	929	1625	2335	3153	3940	4960	5908	8245
OIL PRESSURE	bar	180	180	200	250	300	300	300	300	300	300
	psi	2610	2610	2900	3626	4351	4351	4351	4351	4351	4351
OIL CAPACITY	l/min	25	25	30	50	80/100	80/100	80/100	80/120	120/140	120/140
	gal/min	6	6	8	13	21/26	21/26	21/26	21/31	31/37	31/37
ROTATION PRESSURE	bar	50	50	50	50	120	120	120	120	120	120
	psi	725	725	725	725	1740	1740	1740	1740	1740	1740
ROTATION CAPACITY	l/min	15	15	15	15/20	15/20 (40)	15/20 (40)	15/20 (40)	40	40	40
	gal/min	4	4	4	4/5	4/5 (10.5)	4/5 (10.5)	4/5 (10.5)	10.5	10.5	10.5
OPERATING TOTAL WEIGHT	kg	-	300	480	810	1180	1550	1960	2475	2950	4100
	lbs	-	661	1060	1786	2600	3417	3940	5456	6500	9040

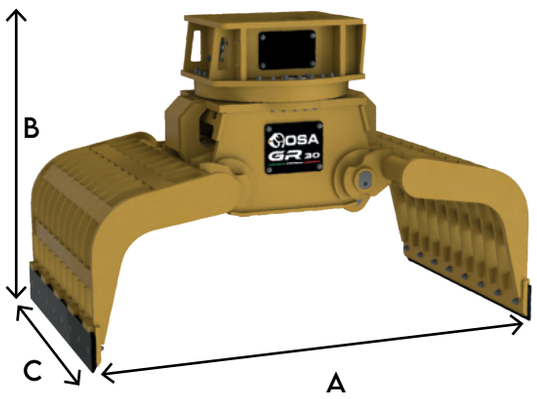

LIV SERIE

HYDRAULIC CYLINDER
It is designed to be fullypro-
tected while guaranteeing
excellent cutting forces.

CLAW
The claw design is ideal for
cutting large logs and
extracting stumps from
the ground.

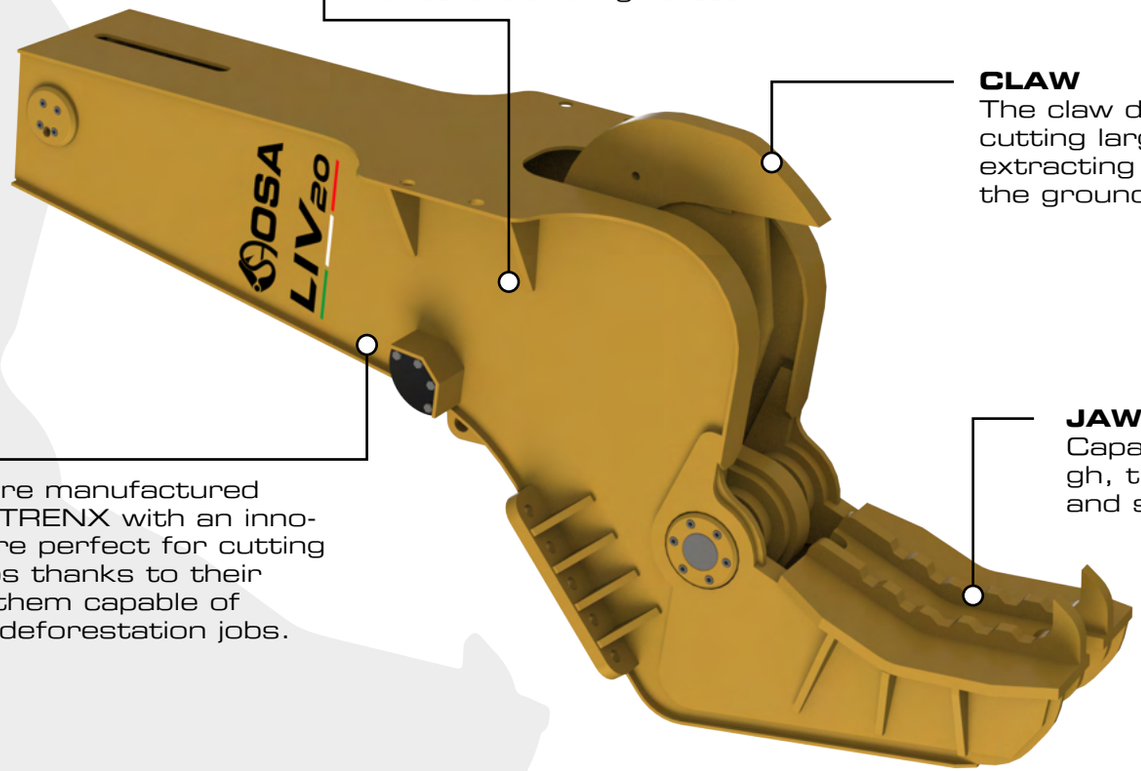

JAWS
Capable of breaking throu-
gh, the jaws are strong
and sharp.

HOUSING
The forestry shears are manufactured
using HARDOX and STRENX with an inno-
vative design. They are perfect for cutting
wood, logs and stumps thanks to their
powerful jaw, making them capable of
tackling the toughest deforestation jobs.
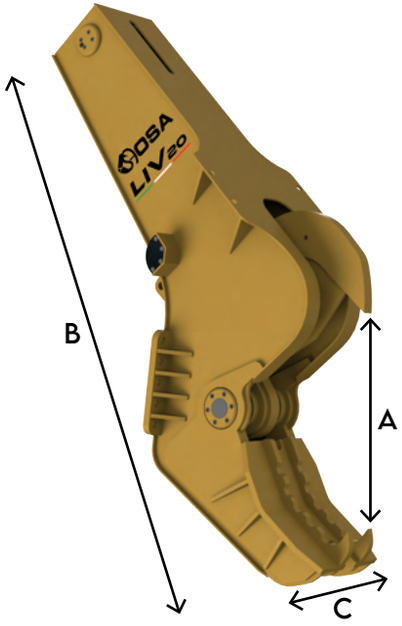
		LIV 10	LIV 15	LIV 20
OPENING (A)	mm in	620 24.5	790 31	1000 39
HEIGHT (B)	mm in	2000 78.8	2830 111	3500 138
WIDTH (C)	mm in	400 15.7	530 21	650 26
WEIGHT	kg lbs	980 2002	1510 3329	2100 4630
OIL PRESSURE	bar psi	300 4352	300 4352	300 4352
OIL CAPACITY	l/min gal/min	180/200 48/53	200/240 53/63	240/300 63/79
EXCAVATOR WEIGHT	kg lbs	9/14 19800/30900	14/22 30800/48500	22/30 48500/66200
OPERATING TOTAL WEIGHT	kg lbs	1080 2381	1660 3660	2300 5070